BM ORBIT HYDRAULIC MOTORS

INDEX

BM ORBIT HYDRAULIC MOTORS

1. ORBIT HYDRAULIC MOTOR WITH SPOOL VALVE

BMR,BMRW MOTOR 01–07

BMP MOTOR 08–10

2. ORBIT HYDRAULIC MOTOR WITH DISK VALVE

INTRODUCTION 11

BMS, BMSW, BMSS MOTOR 12–18

BMT, BMTW, BMTS MOTOR 19–24

BMV, BMVW, BMVS MOTOR 25–30

BMX 31-33

3. APPENDIX

COMPARISON 34

USAGE AND NOTICE 34

COMMON UNIT AND CONVERSION 34

FORMULA 34

INTRODUCTION

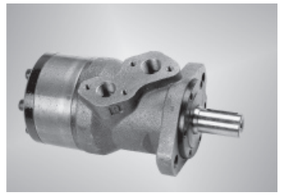

This series of motor,with its shell made of ductile cast iron of adequate intensity, can be applied to situa tions with less load and interval operation, widely to agriculture, forestry, plastics, machine tools and min machines, such as the mould height adjustment of the injection molding machine, the cleaner, the saw the worktable etc.

CHARACTERISTICS

1 The output shaft, with the deep groove ball bearing, can bear certain axial force and radial force.
2 With the axial oil distribution structur, it is of smaller size and less weight.
3 With two inner check valves, no drain connection.
4 With cycoid group with the roller, it has a small friction nd high mechanical efficiency.

TECHNICAL DATA

TYPE		BMR-50 BMRW-50	BMR-80 BMRW-80	BMR-100 BMRW-100	BMR-125 BMRW-125	BMR-160 BMRW-160	BMR-200 BMRW-200	BMR-250 BMRW-250	BMR-315 BMRW-315	BMR-400 BMRW-400
Displacement(ml/r)		51.7	80.5	100.5	126.3	160.8	200.9	252.6	321.5	401.9
Max.Pressure.Drop (Mpa)	cont.	14	14	14	14	14	14	11	9	7
	int.	17.5	17.5	17.5	17.5	17.5	17.5	14	11	9
	peak.	20	20	20	20	20	20	16	13	11
Max.torque (N.m)	cont.	93	152	194	237	310	369	380	380	380
	int.	118	189	236	296	378	450	470	470	470
	peak.	135	216	270	338	433	509	540	540	540
Speed.Range(cont.)(r/min)		10-775	10-750	10-600	9-475	7-375	5-300	5-240	5-190	5-160
Max.Flow(cont.)(L/min)		40	60	60	60	60	60	60	60	60
Max.Output.Power(cont.)(Kw)		7	10	10	10	10	8	6	5	4
Weight (kg)		6.5	6.9	7.0	7.3	7.5	8.0	8.5	9.0	11

Intermittent operation the permissible values may occur for max. 10% of every minute
Peak load: the permissible values may occur for max. 1% of every minute

BMR BMR Orbit Hydraulic Motor With Spool Valve

FUNCTION DIAGRAMS

BMR-50

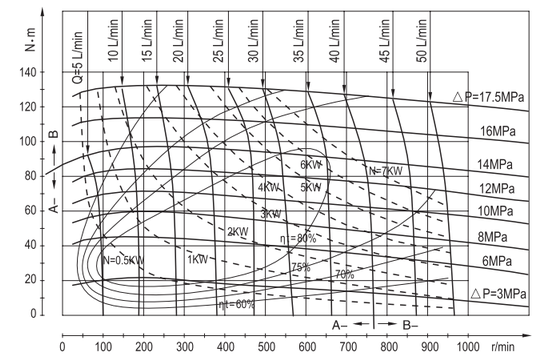

BMR-80

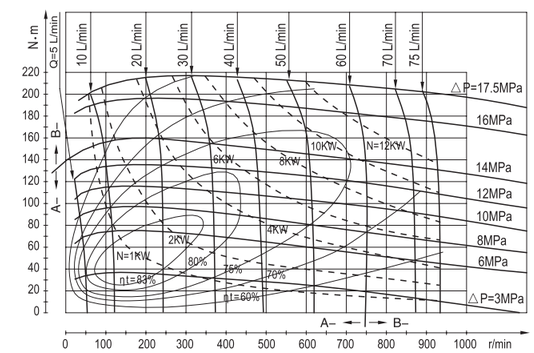

BMR-100

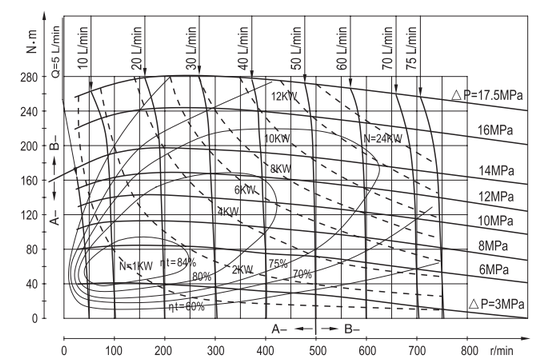

BMR-125

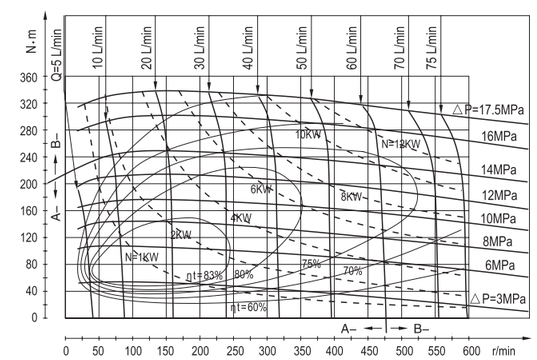

BMR-160

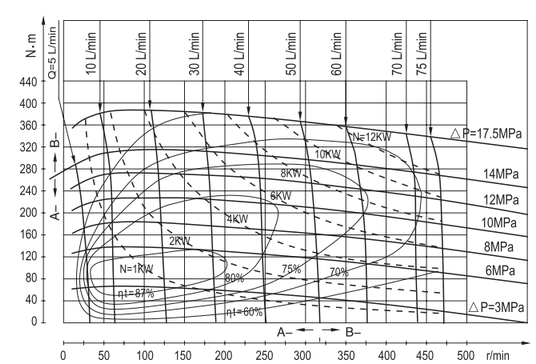

BMR-200

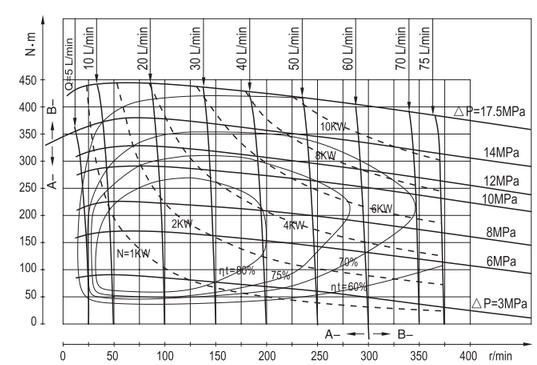

FUNCTION DIAGRAMS

BMR-250

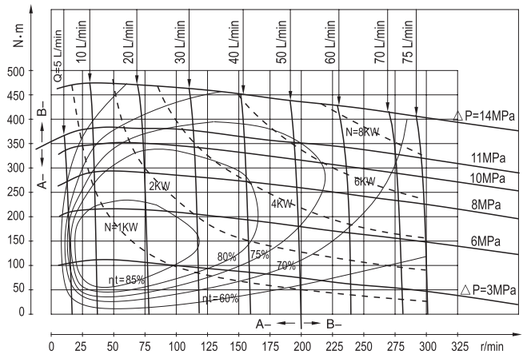

BMR-315

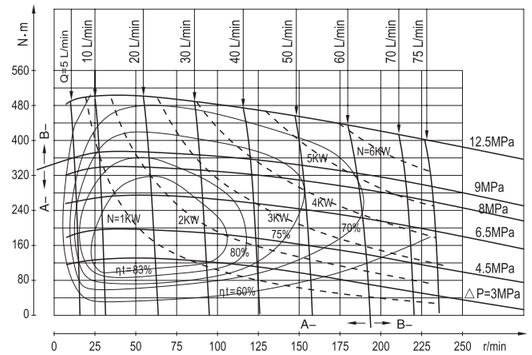

BMR-400

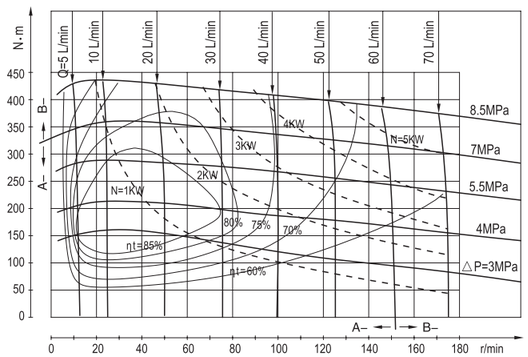

PERMISSIBLE SHAFT LOADS

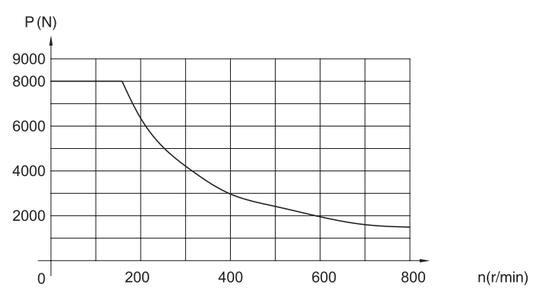

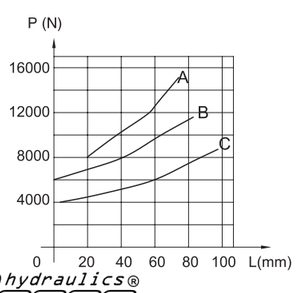

A:n=50 r/min
B:n=200 r/min
C:n=800 r/min

BMR

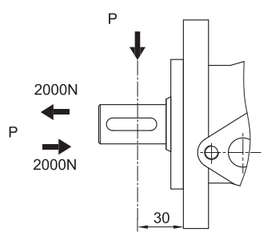

BMRW

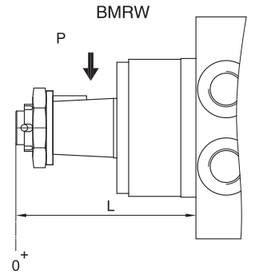

Installation

A,A1 Version Square flange

Flange	ΦC
A	Φ82.5
A1	Φ80

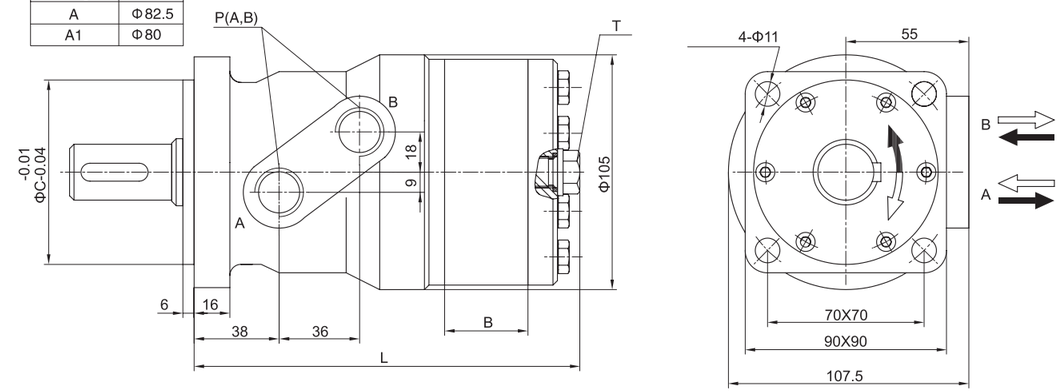

A Ⅱ , A1 Ⅱ Version 2–hole oval flange

Flange	ΦC
A Ⅱ	Φ82.5
A1 Ⅱ	Φ80

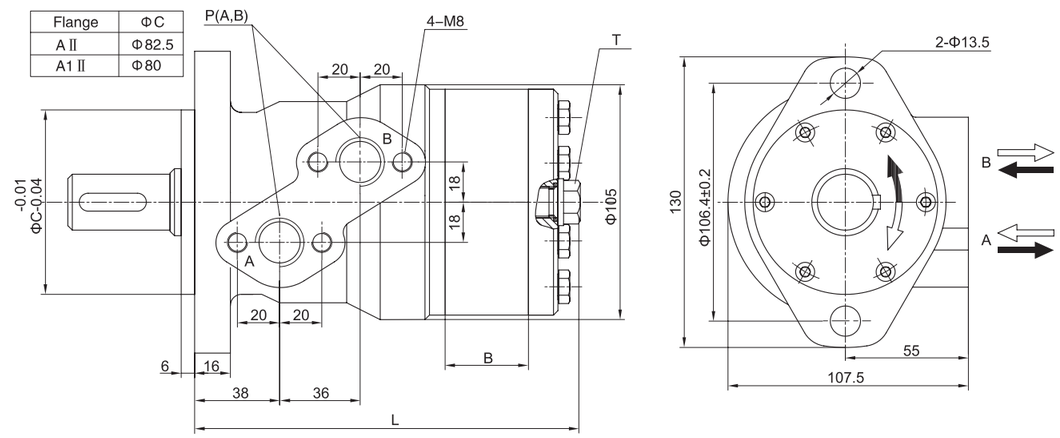

A2Ⅲ Version Square flange

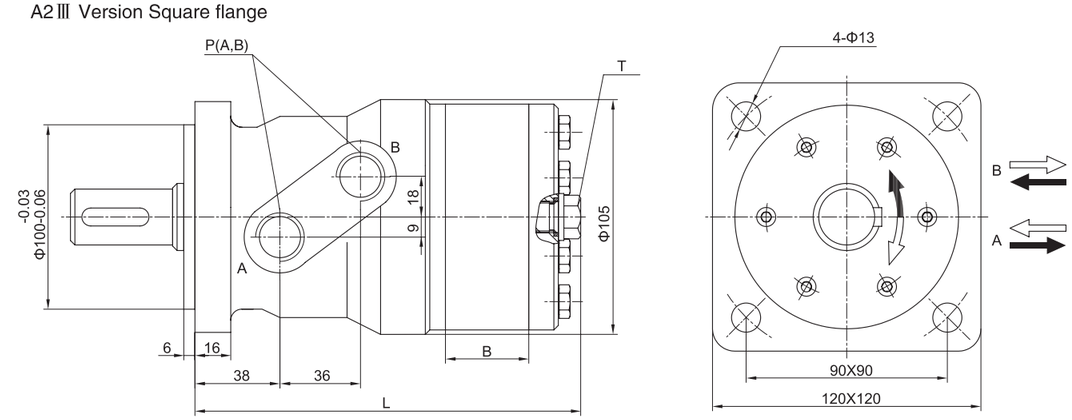

Installation

AⅣ Version 4–hole oval flange

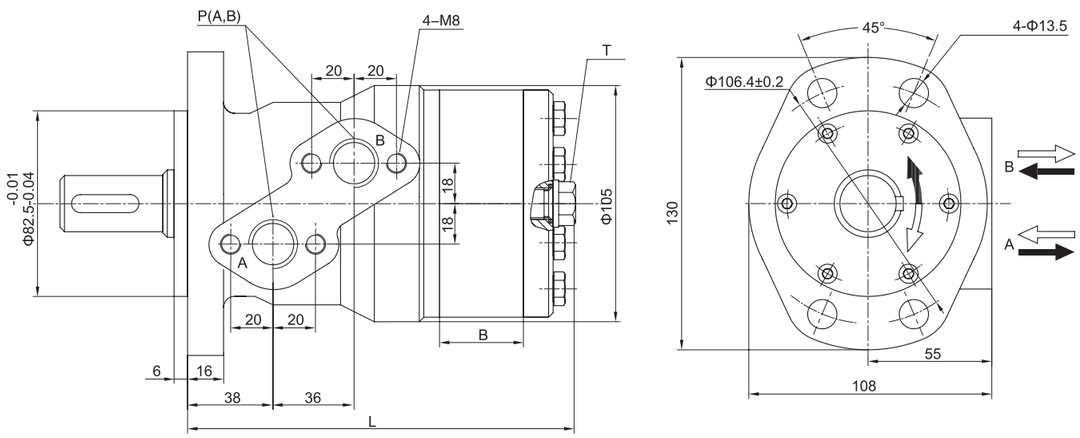

TYPE	BMR-50	BMR-80	BMR-100	BMR-125	BMR-160	BMR-200	BMR-250	BMR-315	BMR-400
L	139	144	148	152	158	165	174	186	200
B	9	14	17.5	22	28	35	44	56	70

SHAFT VERSION

P1：Φ25 Cylindrical shaft, parallel key 8X7X32

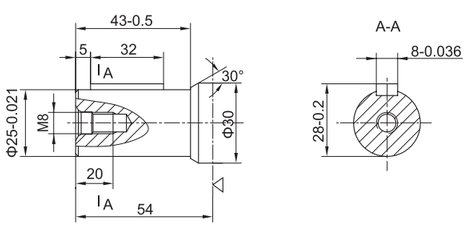

P2：Φ30 Cylindrical shaft, parallel key 8X7X32

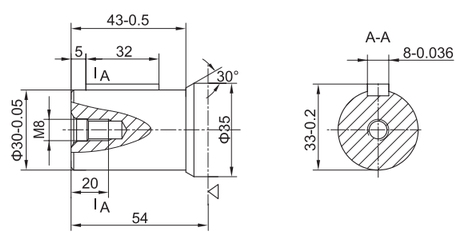

P3：Φ25.4 Cylindrical shaft, parallel key 6.35X6.35X32

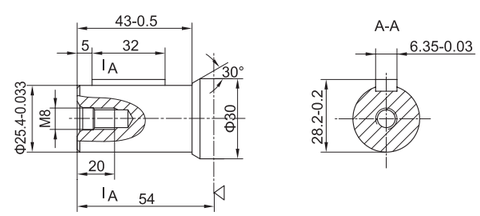

P5：Φ32 Cylindrical shaft, parallel key 10X8X45

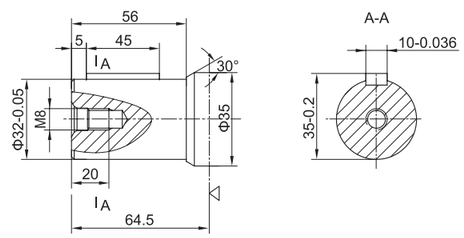

SHAFT VERSION

H1：Φ30 Splined shaft, 6–30X25X6

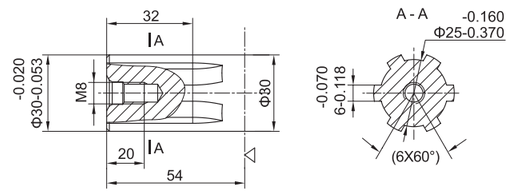

H2：Φ25 Splined shaft, 6–25X21X5

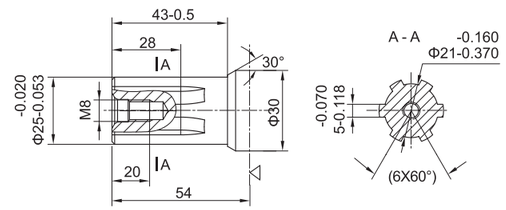

H3：Φ25.4 Splined shaft, 6–25.4X21.4X6.2

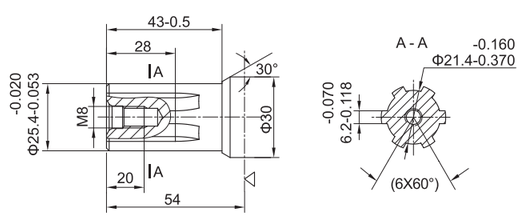

ORDERING CODE

	1	2	3	4		5	
BMR	–					/	

1	Displacement
50、80、100、125、160、200、250、315、400	

2	Shaft
P1	Φ25，8X7X32
P2	Φ30，8X7X32
P3	Φ25.4，6.35X6.35X32
P5	Φ32，10X8X45
H1	Φ30， 6–30X25X6
H2	Φ25， 6–25X21X5
H3	Φ25.4， 6–25.4X21.4X6.2

3	Mounting Flange
A	4–Φ11，Φ82.5
A1	4–Φ11，Φ80
AⅡ	2–Φ13.5，Φ82.5
A1Ⅱ	2–Φ13.5，Φ80
A2Ⅲ	4–Φ13，Φ100
AⅣ	4–Φ13.5，Φ82.5

4	Ports	
	P(A,B)	T
Y	G1/2	M14X1.5
Y1	M18X1.5	M14X1.5
Y2	M22X1.5	M14X1.5
Y5	7/8–14UNF	M14X1.5
Y8	NPT 1/2	M14X1.5

5	Special Features
T	

Installation

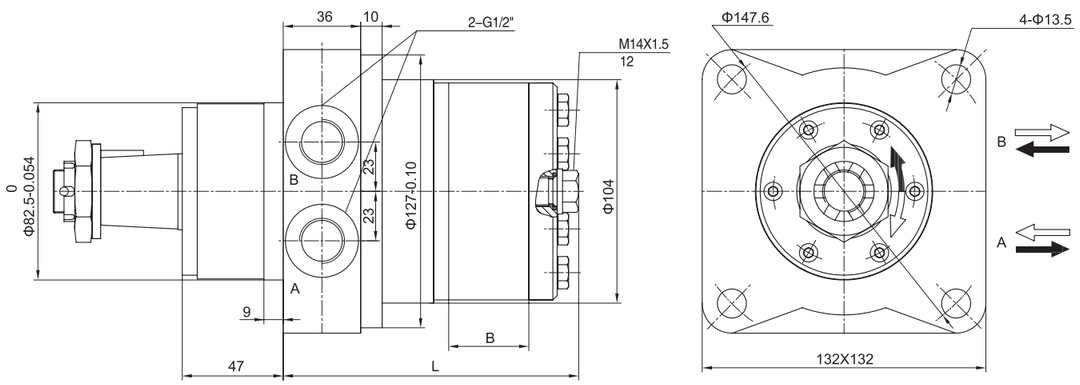

TYPE	BMRW-50	BMRW-80	BMRW-100	BMRW-125	BMRW-160	BMRW-200	BMRW-250	BMRW-315	BMRW-400
L	108	113	117	121	127	134	143	155	169
B	9	14	17.5	22	28	35	44	56	70

SHAFT VERSION

Z：Φ35 Tapered shaft, taper1: 10, parallel key B6X6X20

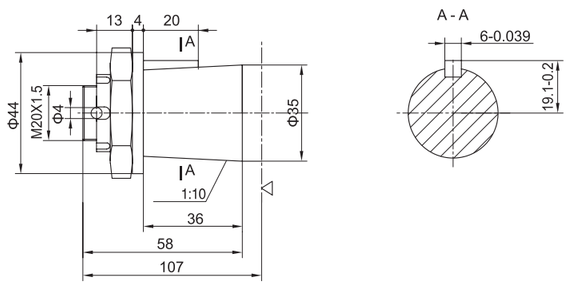

ORDERING CODE

	1	2					3
BMRW	–			A	Y	/	

1	Displacement
50、80、100、125、160、200、250、315、400	

2	Shaft
Z	Φ35，1:10，B6X6X20

3	Special Features
T	

INTRODUCTION

This series of motor are small volume,economical type,which is designed with Spool Valve,which adapt the gerotor gear set desig n and provide compact volume,high power and low weight.

CHARACTERISTICS

1 Advanced manufacturing devices for the Gerotor gear set, which provide small volume, high efficiency and long life.
2 Shaft seal can bear high pressure of motor of which can be used in parallel or in series.
3 Advanced construction design,high power and low weight.

TECHNICAL DATA

TYPE		BMP-50	BMP-80	BMP-100	BMP-125	BMP-160	BMP-200	BMP-250	BMP-315	BMP-400
Displacement(ml/r)		52.9	79.3	98.2	120.9	158.7	196.4	241.8	317.3	392.9
Max.Pressure.Drop (Mpa)	cont.	14	14	14	14	14	14	11	9	7
	int.	17.5	17.5	17.5	17.5	17.5	17.5	14	11	9
	peak.	20	20	20	20	20	20	16	13	11
Max.torque (N.m)	cont.	89	150	191	235	307	365	378	378	378
	int.	110	185	231	292	376	440	465	465	465
	peak.	130	215	268	336	430	506	537	537	537
Speed.Range(cont.)(r/min)		10-800	10-770	9-615	9-480	8-385	7-310	5-250	5-195	5-155
Max.Flow(cont.)(L/min)		40	60	60	60	60	60	60	60	60
Max.Output.Power(cont.)(Kw)		7	10	10	10	10	8	6	5	4
Weight (kg)		5.6	5.7	5.9	6.0	6.2	6.4	6.6	6.9	7.4

Intermittent operation the permissible values may occur for max. 10% of every minute
Peak load: the permissible values may occur for max. 1% of every minute

PERMISSIBLE SHAFT LOADS

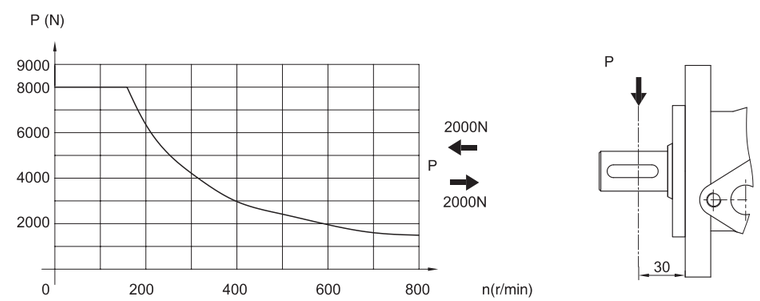

Installation

A Ⅱ Version 2–hole oval flange

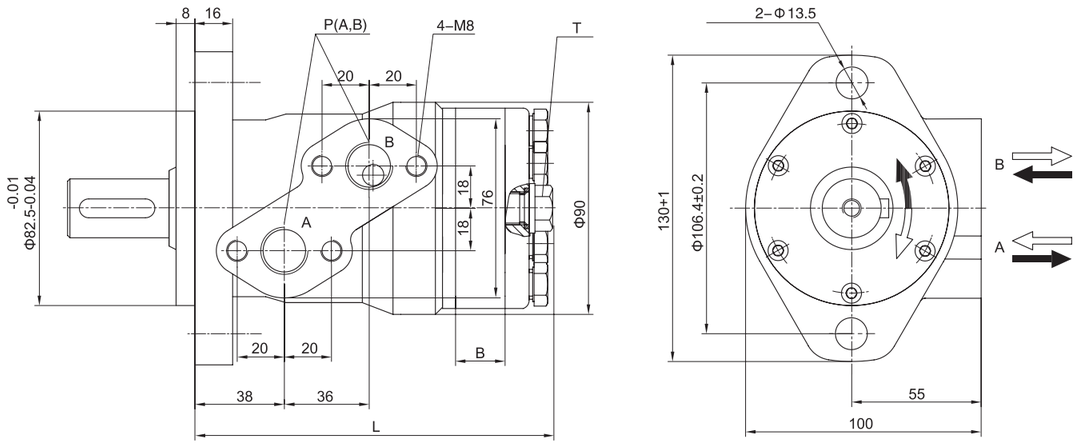

C,C1 Version Square flange

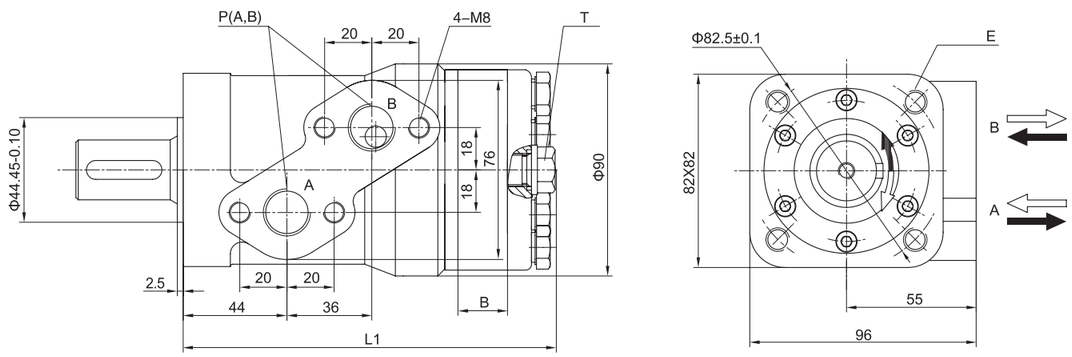

Flange	E
C	4–M10
C1	4–$\frac{3}{8}$–16UNC

TYPE	BMP-50	BMP-80	BMP-100	BMP-125	BMP-160	BMP-200	BMP-250	BMP-315	BMP-400
L	141	145	147	150	155	160	166	176	186
L1	147	151	153	156	161	166	172	182	192
B	7	11	13	16	21	26	32	42	52

SHAFT VERSION

Match with A Ⅱ flange

P1：Φ25 Cylindrical shaft, parallel key 8X7X32

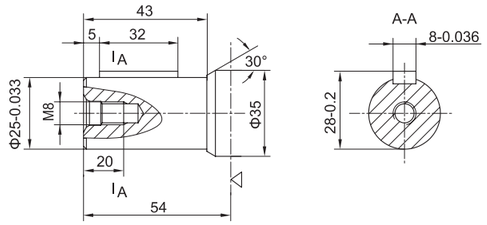

P3：Φ25.4 Cylindrical shaft, parallel key 6.35X6.35X32

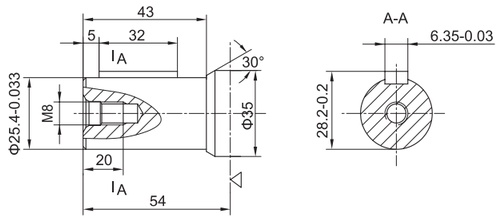

Match with C, C1 flange

P1：Φ25 Cylindrical shaft, parallel key 8X7X32

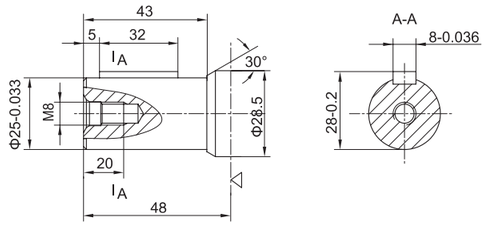

P3：Φ25.4 Cylindrical shaft, parallel key 6.35X6.35X32

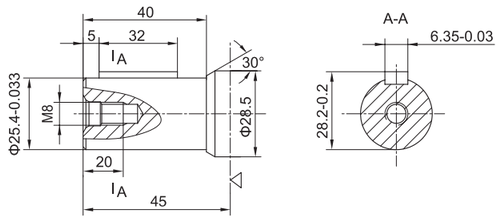

ORDERING CODE

		1	2	3	4		5
BMP	–					/	

1	Displacement
50、80、100、125、160、200、250、315、400	

2	Shaft
P1	Φ25，8X7X32
P3	Φ25.4，6.35X6.35X32

3	Mounting Flange
A Ⅱ	2–Φ13.5，Φ82.5
C	4–M10，Φ44.45
C1	4–3/8–16UNC，Φ44.45

4	Ports	
	P(A,B)	T
Y	G1/2	M14X1.5
Y1	M18X1.5	M14X1.5
Y2	M22X1.5	M14X1.5
Y5	7/8–14UNF	M14X1.5
Y8	NPT 1/2	M14X1.5

5	Special Features
T	

INTRODUCTION

FEATURES AND APPLICATIONS

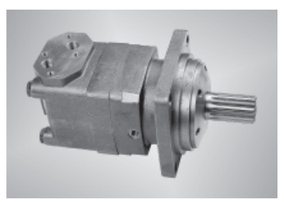

BM hydraulic motor is one type of high torque low speed hydraulic motors, with high efficiency and long life. BM motor has a wide speed range, high starting torque and rotating stable at high speed Compact and light, it can be connected to working machine directly, adapted to all kinds of low speed heavy load facilities.

BM hydraulic motors are widely applied in agriculture machinery, fishing machinery, plastic industry, mining, and construction machinery.

WORKING PRINCIPLE

1. orbit cam
2. roll
3. distributor
4. auxiliary plate
5. distributor shaft
6. transmission shaft
7. output shaft

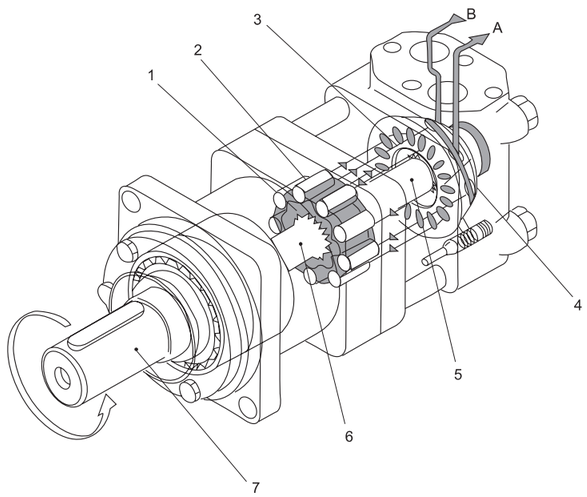

Shown as the drawing, high pressure oil goes into the motor's housing through the inlet, passing the auxiliary plate, distributor, then the working space between the orbit cam and rolls. Pressed by the high pressure oil, orbit cam rotates from the high pressure side to the low pressure side. The orbit cam makes rotation and revolution against the rolls, at the same time, high pressure oil is distributed continuously, thus, the output shaft can also rotate continuously.

The output speed can be controlled by adjusting the inlet flow capability of the motor, and the rotating direction can be changed by exchanging the flow direction.

BMS BMS Orbit Hydraulic Motor With Disk Valve

TECHNICAL DATA

TYPE		BMS-80 BMSS-80 BMSW-80	BMS-100 BMSS-100 BMSW-100	BMS-125 BMSS-125 BMSW-125	BMS-160 BMSS-160 BMSW-160	BMS-200 BMSS-200 BMSW-200	BMS-250 BMSS-250 BMSW-250	BMS-315 BMSS-315 BMSW-315	BMS-400 BMSS-400 BMSW-400
Displacement(ml/r)		80.5	100.5	126.3	160.8	200.9	252.6	321.5	401.9
Max.Pressure.Drop (Mpa)	cont.	17.5	17.5	17.5	16	16	12.5	12.5	10
	int.	20	20	20	20	20	16	16	14
	peak.	22.5	22.5	22.5	22.5	22.5	20	20	17.5
Max.torque (N.m)	cont.	194	242	303	358	438	440	551	560
	int.	218	283	345	429	540	580	625	687
	peak.	271	318	373	459	576	700	831	865
Speed.Range(cont.)(r/min)		10-810	10-750	9-600	7-470	6-375	6-300	5-240	5-180
Max.Flow(cont.)(L/min)		65	75	75	75	75	75	75	75
Max.Output.Power(cont.)(Kw)		14	16	16	14	14	11	10	8
Weight (kg)		9.8	10.0	10.3	10.7	11.1	11.6	12.3	13.1

Intermittent operation the permissible values may occur for max. 10% of every minute
Peak load: the permissible values may occur for max. 1% of every minute

PERMISSIBLE SHAFT LOADS

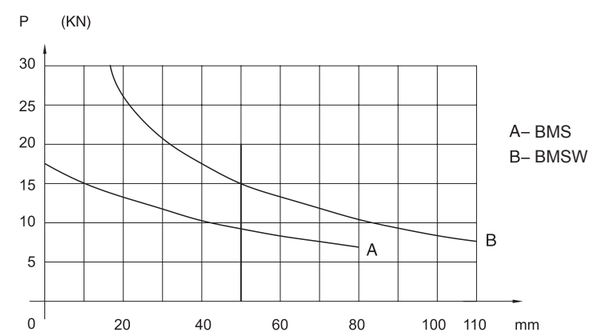

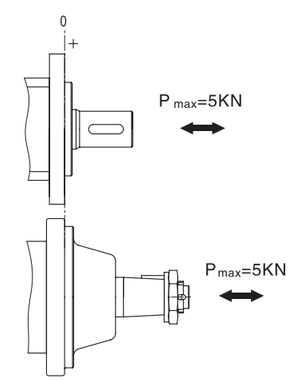

FUNCTION DIAGRAMS

BMS-80

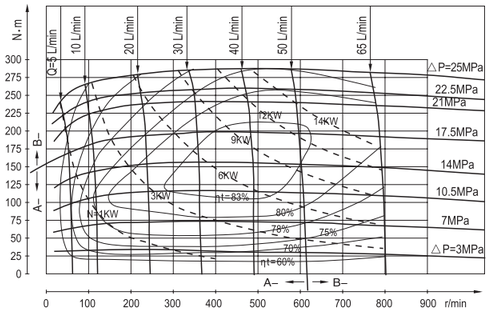

BMS-100

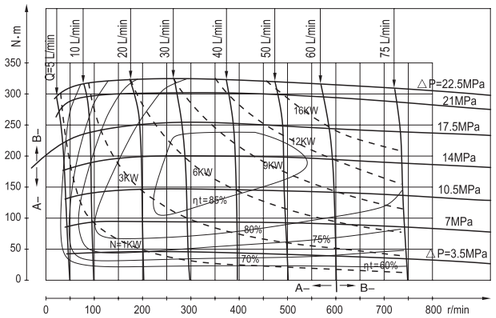

BMS-125

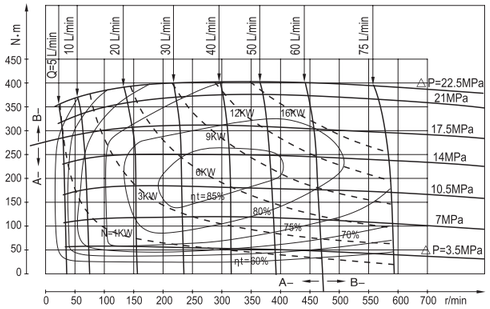

BMS-160

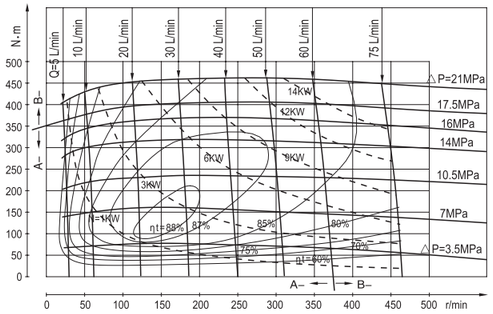

BMS-200

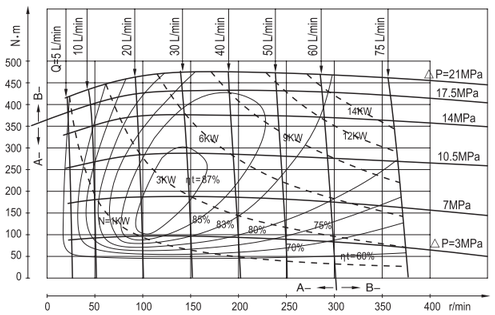

BMS-250

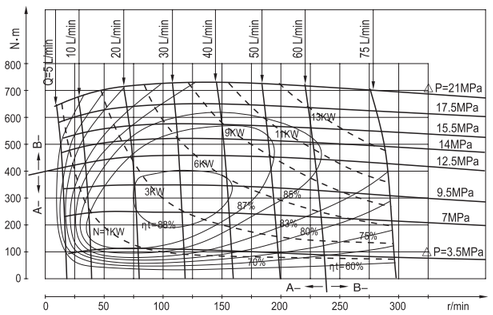

BMS-315

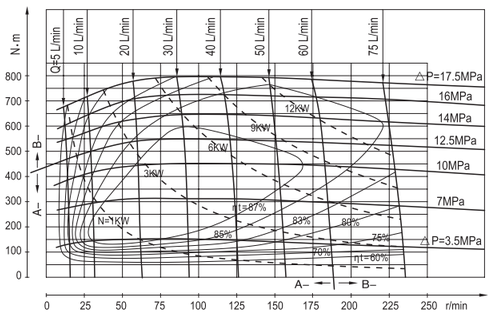

BMS-400

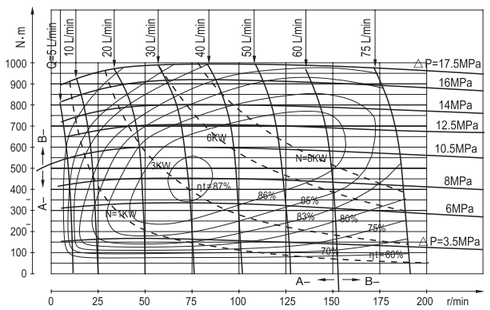

Installation

A,A1 Version Square flange

Flange	ΦC
A	Φ82.5
A1	Φ80

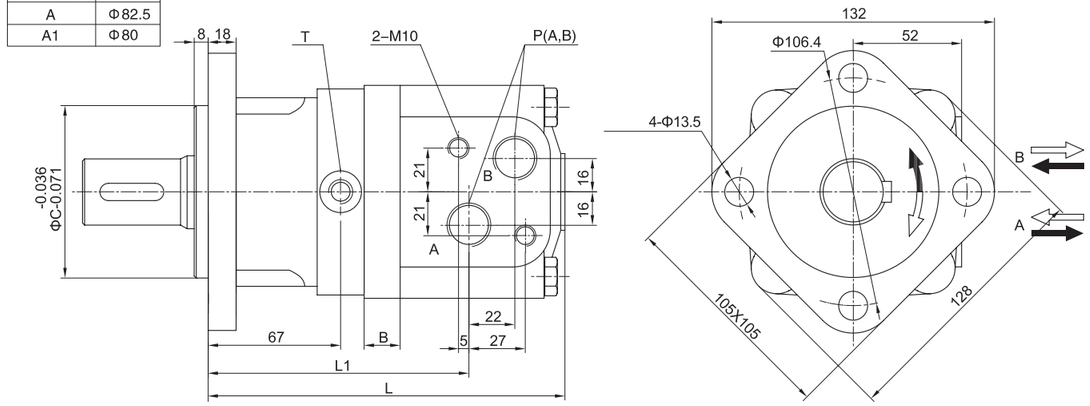

A Ⅱ, A1 Ⅱ Version 2–hole oval flange

Flange	ΦC
A Ⅱ	Φ82.5
A1 Ⅱ	Φ80

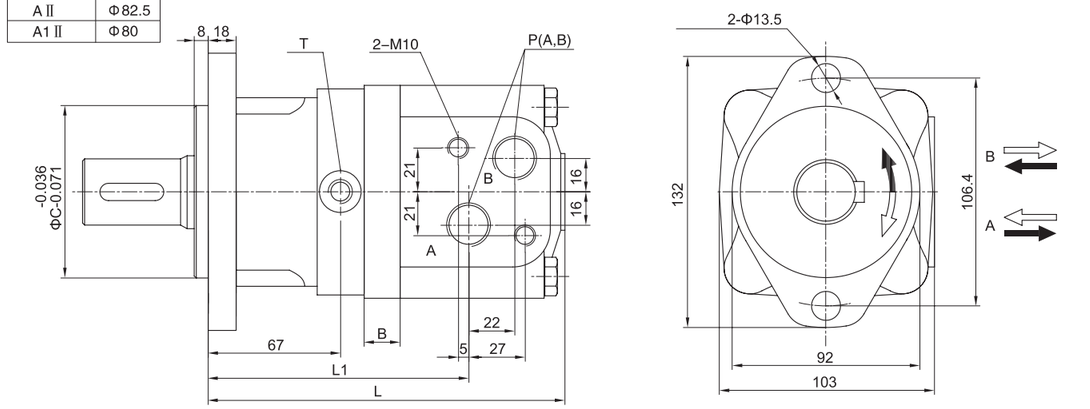

A2Ⅲ Version Square flange

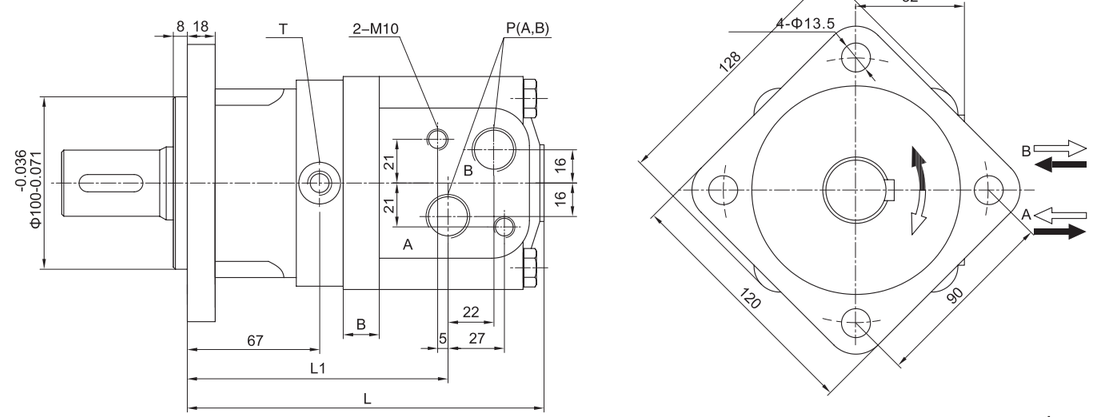

Installation

AⅣ Version 4–hole oval flange

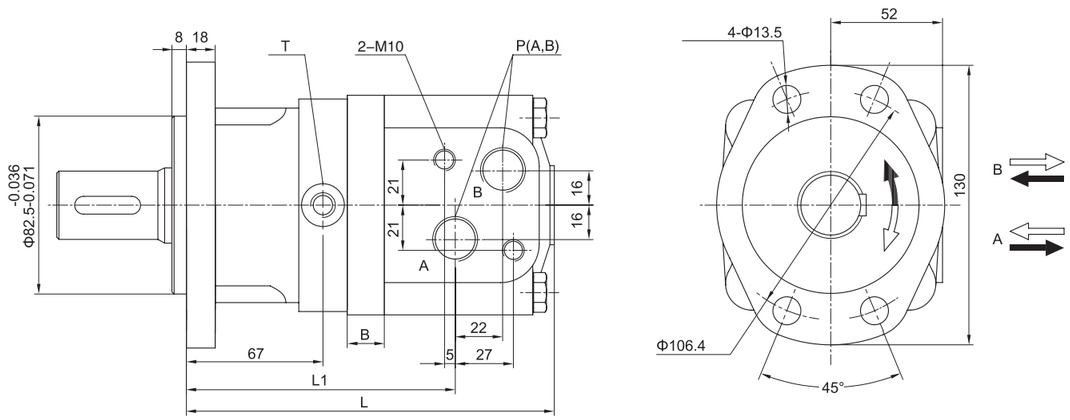

TYPE	BMS-80	BMS-100	BMS-125	BMS-160	BMS-200	BMS-250	BMS-315	BMS-400
L	167	170	175	181	188	197	208	222
L1	124	127	132	138	145	154	166	180
B	11	14.5	19	25	32	41	53	67

SHAFT VERSION

P：Φ32 Cylindrical shaft, parallel key 10X8X45

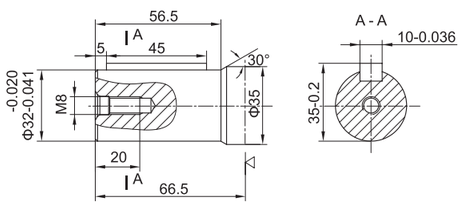

P3：Φ25.4 Cylindrical shaft, parallel key 6.35X6.35X32

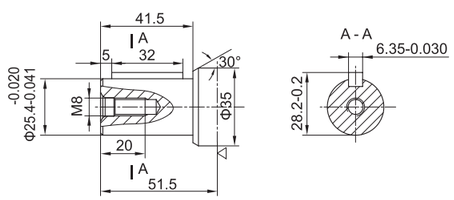

P5：Φ31.75 Cylindrical shaft, parallel key 7.96X7.96X32

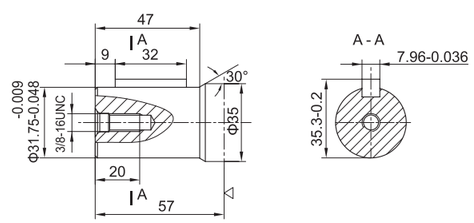

H1：Φ30 Splined shaft, 6–30X25X6

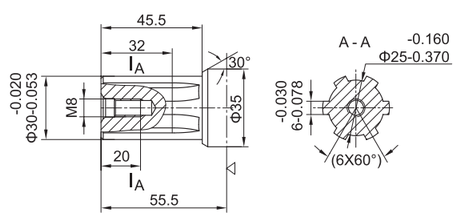

SHAFT VERSION

H2：Φ25 Splined shaft, 6–25X21X5

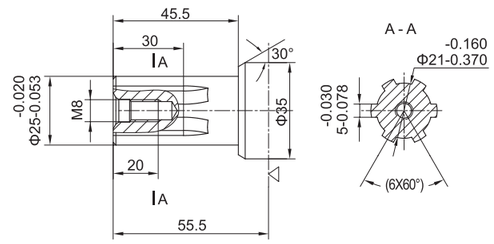

H3：Φ34.85 Splined shaft, 6–34.85X28.9X8.64

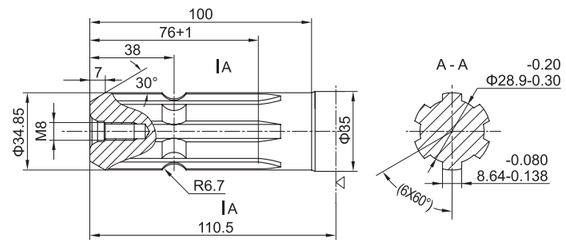

ORDERING CODE

		1	2	3	4		5
BMS	–					/	

1	Displacement
80、100、125、160、200、250、315、400	

2	Shaft
P	Φ32 , 10X8X45
P3	Φ25.4 , 6.35X6.35X32
P5	Φ31.75 , 7.96X7.96X32
H1	Φ30 , 6–30X25X6
H2	Φ25 , 6–25X21X5
H3	Φ34.85 , 6–34.85X28.9X8.64

3	Mounting Flange
A	4–Φ13.5 , Φ82.5
A1	4–Φ13.5 , Φ80
AⅡ	2–Φ13.5 , Φ82.5
A1Ⅱ	2–Φ13.5 , Φ80
A2Ⅲ	4–Φ13.5 , Φ100
AⅣ	4–Φ13.5 , Φ82.5

4	Ports	
	P(A,B)	T
Y	G1/2	G1/4
Y1	M18X1.5	M14X1.5
Y2	M22X1.5	M14X1.5
Y5	7/8–14UNF	7/16–20UNF
Y8	NPT 1/2	G1/4

5	Special Features
T	

Installation

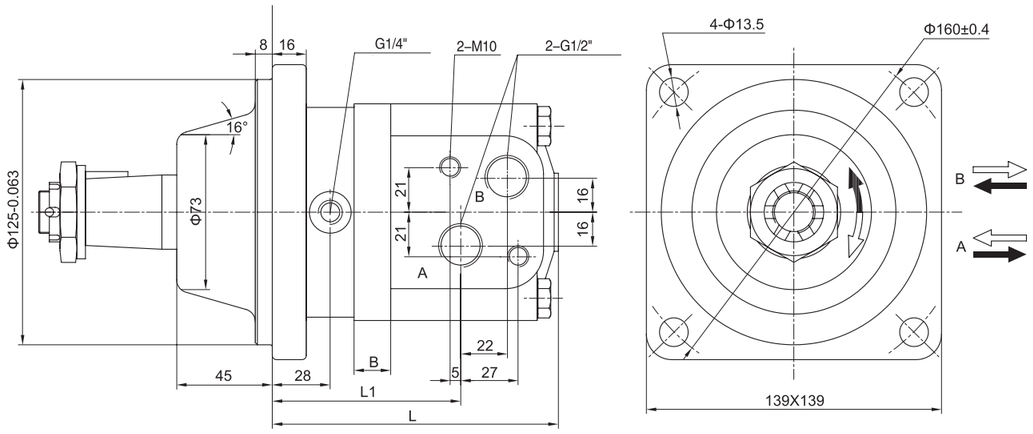

TYPE	BMSW-80	BMSW-100	BMSW-125	BMSW-160	BMSW-200	BMSW-250	BMSW-315	BMSW-400
L	129	132	137	143	150	159	169	183
L1	83	86	91	97	104	113	125	139
B	11	14.5	19	25	32	41	53	67

SHAFT VERSION

P：Φ32 Cylindrical shaft, parallel key 10X8X45

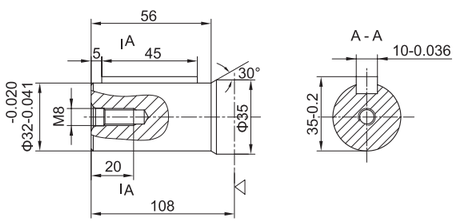

Z：Φ35 Tapered shaft, taper1: 10, parallel key C6X6X30

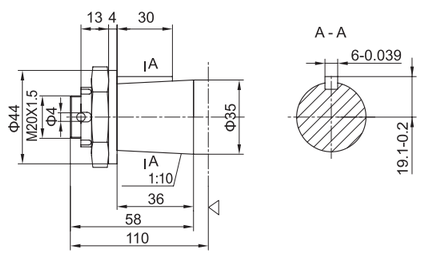

ORDERING CODE

		1	2				3
BMSW	–			A	Y	/	

1	Displacement
80、100、125、160、200、250、315、400	

2	Shaft
P	Φ32 ， 10X8X45
Z	Φ35 ， 1:10，C6X6X30

3	Special Features
T	

Installation

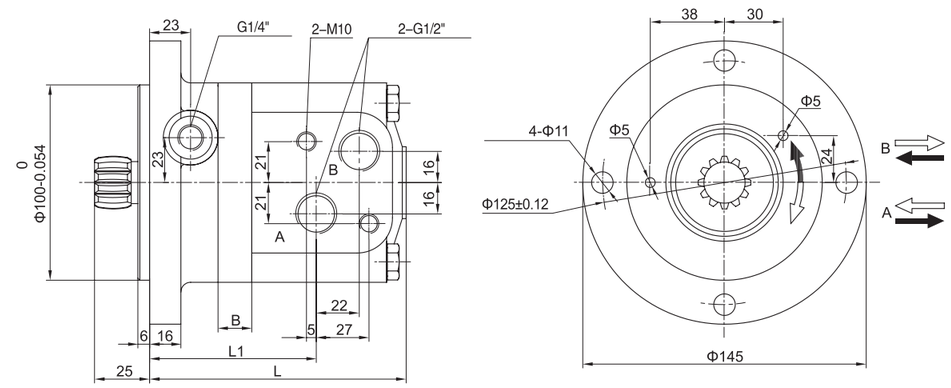

TYPE	BMSS-80	BMSS-100	BMSS-125	BMSS-160	BMSS-200	BMSS-250	BMSS-315	BMSS-400
L	122	126	130	136	143	152	164	178
L1	79	83	87	93	100	109	121	135
B	11	14.5	19	25	32	41	53	67

DIMENSIONS OF THE ATTACHED COMPONENT

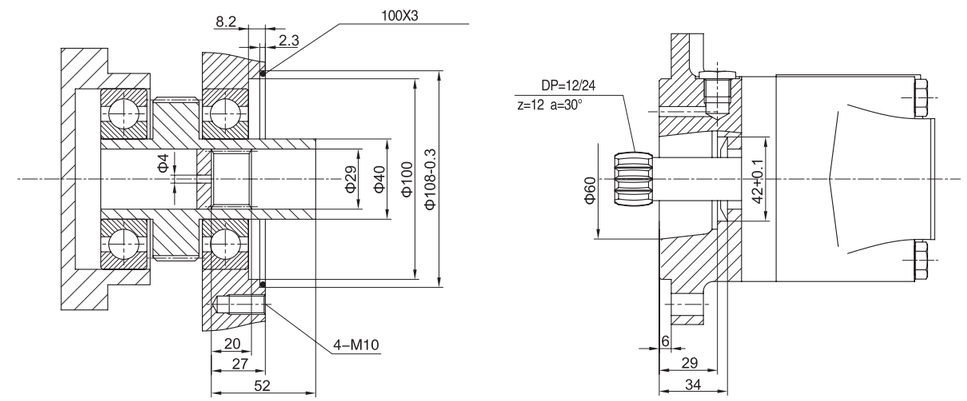

ORDERING CODE

		1		2
BMSS	–		/	

1	Displacement
80、100、125、160、200、250、315、400	

2	Special Features
T	

TECHNICAL DATA

TYPE		BMT-160 BMTS-160 BMTW-160	BMT-200 BMTS-200 BMTW-200	BMT-250 BMTS-250 BMTW-250	BMT-320 BMTS-320 BMTW-320	BMT-400 BMTS-400 BMTW-400	BMT-500 BMTS-500 BMTW-500
Displacement(ml/r)		158.8	200.8	252.2	317.5	401.6	535.3
Max.Pressure.Drop (Mpa)	cont.	20	20	20	20	18	16
	int.	24	24	24	24	21	18
	peak.	28	28	28	28	24	21
Max.torque (N.m)	cont.	450	561	710	902	1008	1121
	int.	559	714	883	1143	1255	1377
	peak.	663	818	1021	1322	1431	1598
Speed.Range(cont.)(r/min)		10-625	9-625	8-500	7-380	6-305	5-240
Max.Flow(cont.)(L/min)		100	125	125	125	125	125
Max.Output.Power(cont.)(Kw)		20.1	25.2	25.2	25.2	22	31
Weight (kg)		20.3	20.8	21.4	22.4	23	24

Intermittent operation the permissible values may occur for max. 10% of every minute
Peak load: the permissible values may occur for max. 1% of every minute

PERMISSIBLE SHAFT LOADS

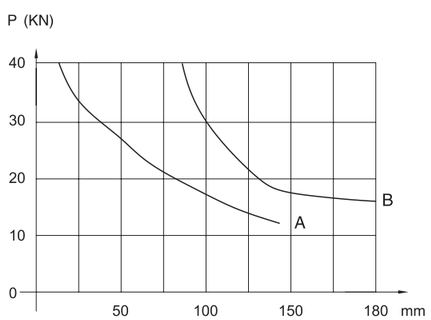

A– BMT
B– BMTW

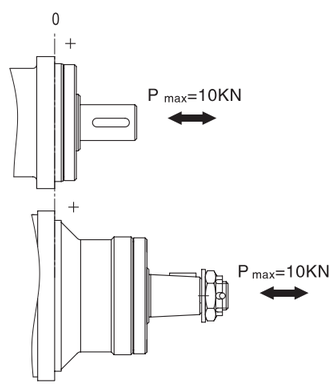

FUNCTION DIAGRAMS

BMT-160

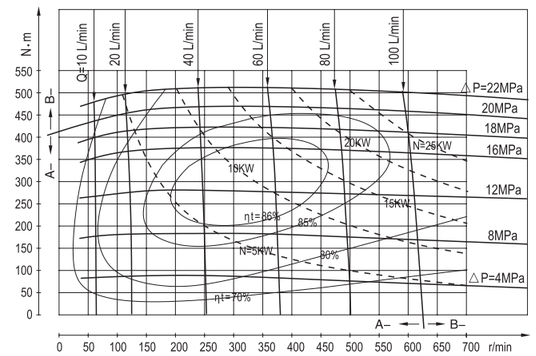

BMT -200

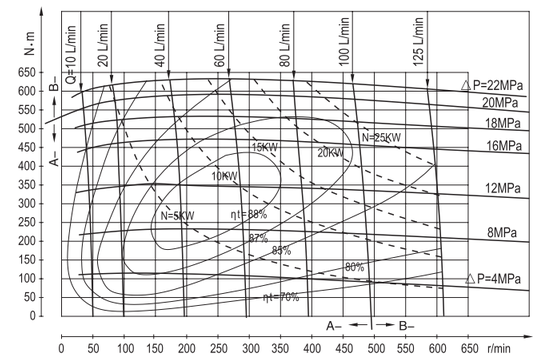

BMT-250

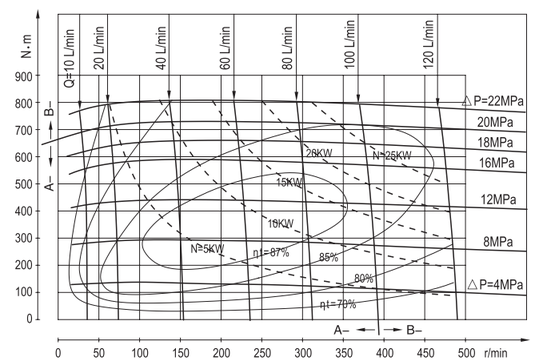

BMT-320

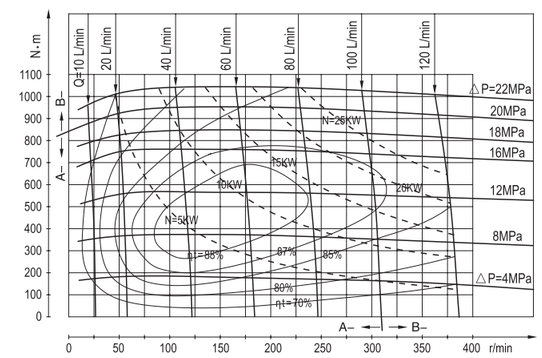

BMT-400

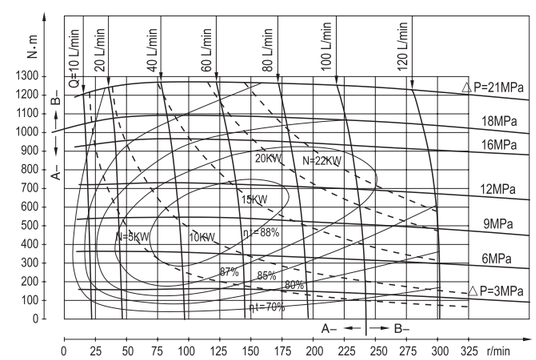

BMT-500

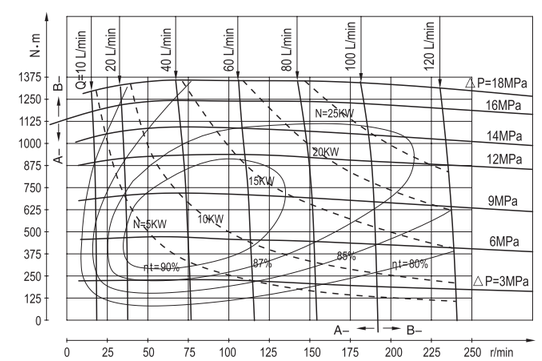

Installation

A,A1 Version Square flange

Flange	ΦC
A	Φ125
A1	Φ90

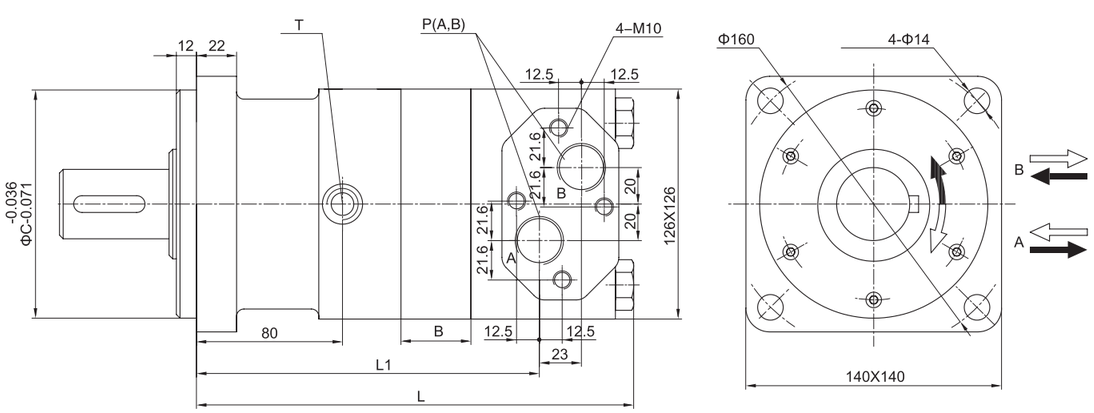

A4 Version Square flange

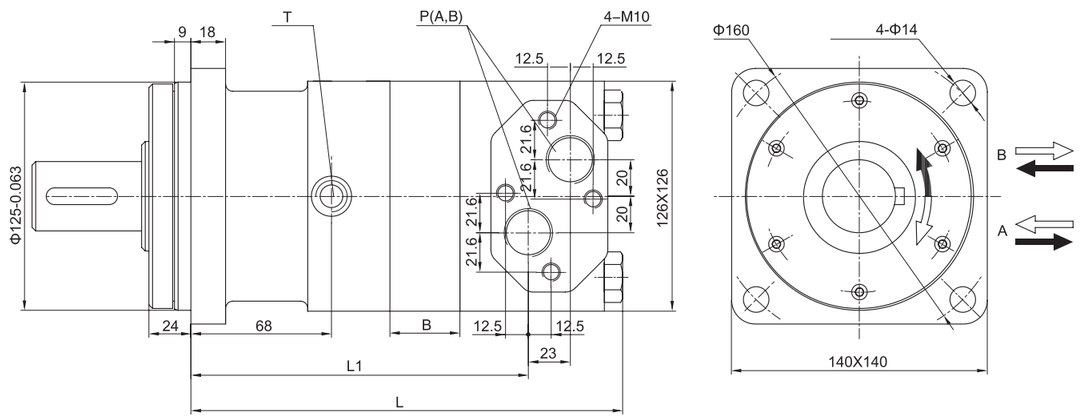

TYPE	BMT-160	BMT-200	BMT-250	BMT-320	BMT-400	BMT-500
L	212	216.5	222	229	238	257
L1	150	155	160	167	176	195
B	12	16.5	22	29	38	56.5

SHAFT VERSION

Only match with A,A1 flange

P：Φ40 Cylindrical shaft, parallel key 12X8X50

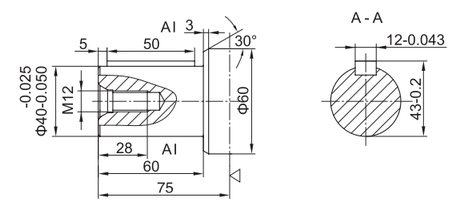

P1：Φ32 Cylindrical shaft, parallel key 10X8X50

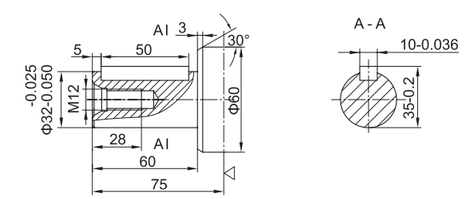

H4：Φ35 Splined shaft, 6–35X29X10

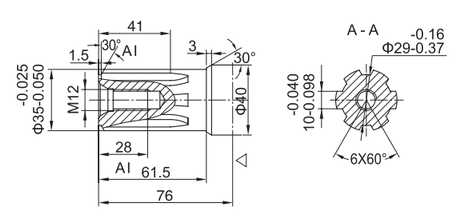

H5：Φ35 Splined shaft, 6–35X29X6

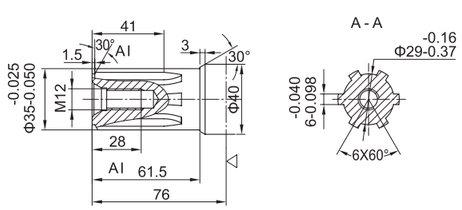

Only match with A4 flange

P3 – Φ40 Cylindrical shaft, parallel key 12X8X70

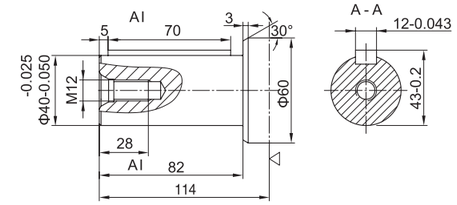

K3 – Φ38.1 Involute splined shaft, Pitch12/24 Teeth 17 Pressure angle 30°

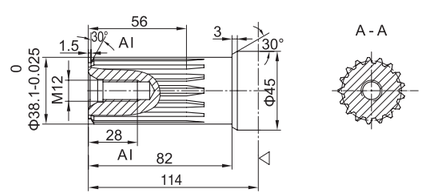

ORDERING CODE

		1	2	3	4		5
BMT	–					/	

1	Displacement
160、200、250、320、400、500	

2	Shaft
P	Φ40 , 12X8X50
P1	Φ32 , 10X8X50
P3	Φ40 , 12X8X70
H4	Φ35 , 6–35X29X10
H5	Φ35 , 6–35X29X6
K3	Φ38.1 , DP12/24 z17 a30°

3	Mounting Flange
A	4–Φ14 , Φ125
A1	4–Φ14 , Φ90
A4	4–Φ14 , Φ125

4	Ports	
	P(A,B)	T
Y	G3/4	G1/4
Y3	M27X2	M14X1.5
Y4	M22X1.5	M14X1.5
Y5	M20X1.5	M14X1.5

5	Special Features
T	

Installation

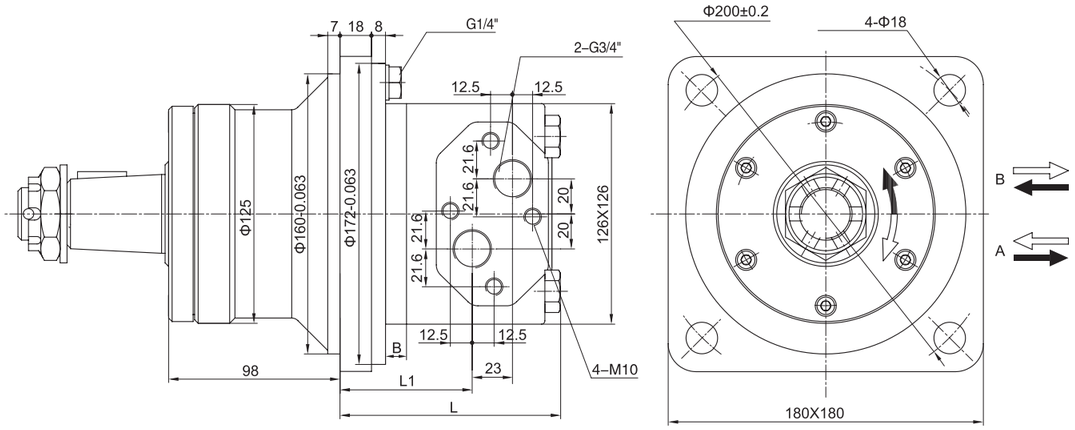

TYPE	BMTW-160	BMTW-200	BMTW-250	BMTW-320	BMTW-400	BMTW-500
L	127	134	138	145	154	172
L1	75	79	85	92	101	119
B	12	16.5	22	29	38	56.5

SHAFT VERSION

P31：Φ40 Cylindrical shaft, parallel key 12X8X70

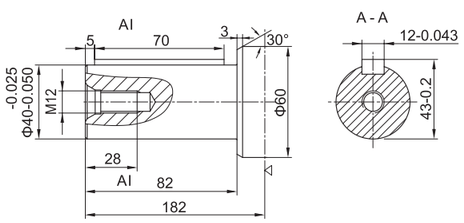

Z：Φ45 Tapered shaft, taper1: 10, parallel key B12X8X28

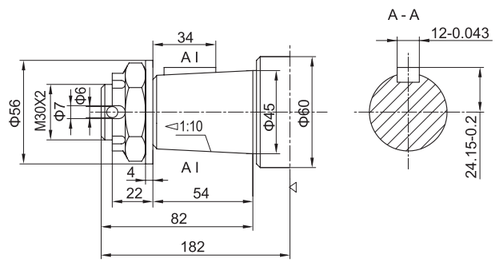

ORDERING CODE

		1	2				3
BMTW	–			A	Y	/	

1	Displacement
160、200、250、320、400、500	

2	Shaft
P31	Φ40 , 12X8X70
Z	Φ45， 1:10，B12X8X28

3	Special Features
T	

Installation

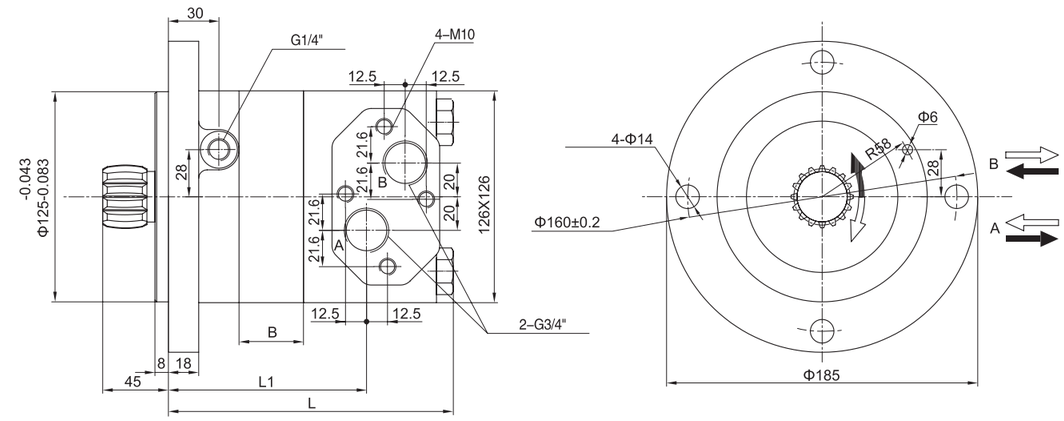

TYPE	BMTS-160	BMTS-200	BMTS-250	BMTS-320	BMTS-400	BMTS-500
L	139	144	149	156	165	184
L1	92	96	102	109	118	136
B	12	16.5	22	29	38	56.5

SHAFT VERSION

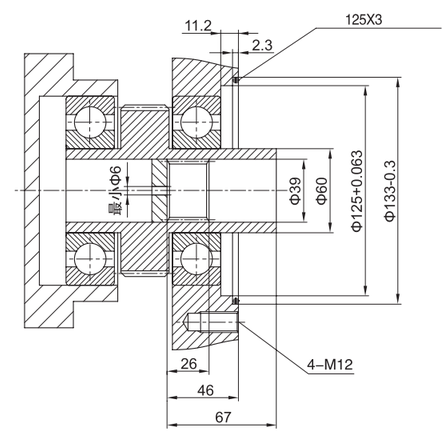

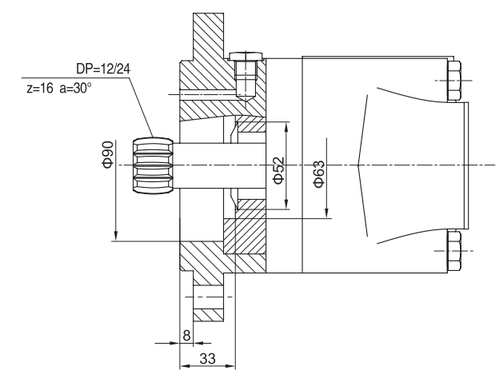

ORDERING CODE

		1		2
BMTS	–		/	

1	Displacement
160、200、250、320、400、500	

2	Special Features
T	

TECHNICAL DATA

TYPE		BMV-315 BMVS-315 BMVW-315	BMV-400 BMVS-400 BMVW-400	BMV-500 BMVS-500 BMVW-500	BMV-630 BMVS-630 BMVW-630	BMV-800 BMVS-800 BMVW-800	BMV-985 BMVS-985 BMVW-985
Displacement(ml/r)		314.9	399.7	496.6	617.8	787.4	969.1
Max.Pressure.Drop (Mpa)	cont.	20	20	20	18	16	14
	int.	24	24	24	21	18	16
	peak.	28	28	28	24	21	18
Max.torque (N.m)	cont.	873	1108	1385	1570	1773	1900
	int.	1119	1440	1783	1951	2122	2133
	peak.	1293	1650	2060	2249	2481	2399
Speed.Range(cont.)(r/min)		10-630	9-500	8-400	6-315	5-250	5-160
Max.Flow(cont.)(L/min)		200	200	200	200	200	160
Max.Output.Power(cont.)(Kw)		32	40	40	40	35	24
Weight (kg)		30.7	31.5	32.4	33.6	35.2	37.2

Intermittent operation the permissible values may occur for max. 10% of every minute
Peak load: the permissible values may occur for max. 1% of every minute

PERMISSIBLE SHAFT LOADS

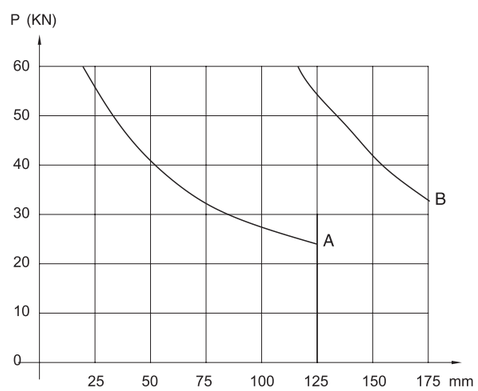

A– BMV
B– BMVW

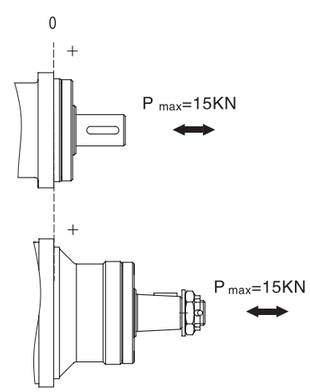

FUNCTION DIAGRAMS

BMV-315

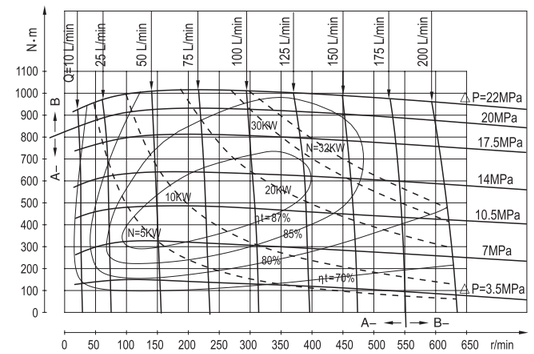

BMV-400

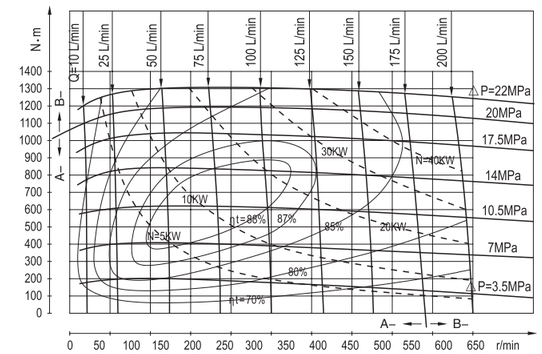

BMV-500

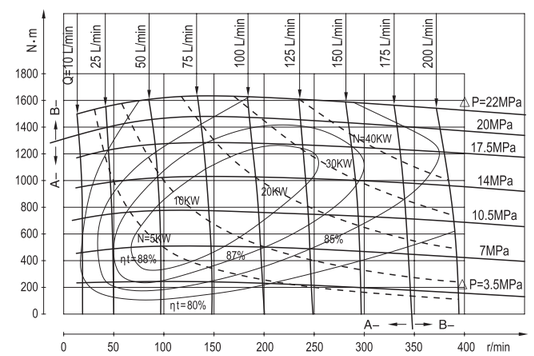

BMV-630

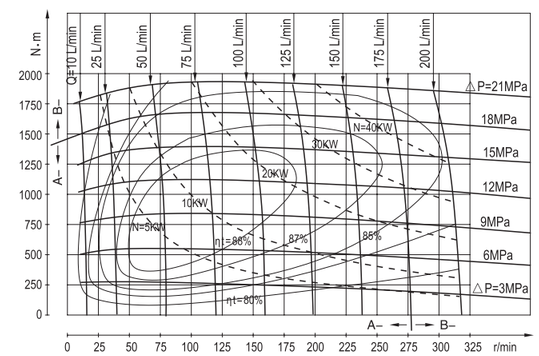

BMV-800

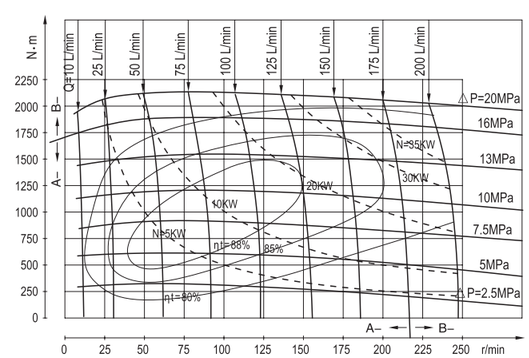

BMV-985

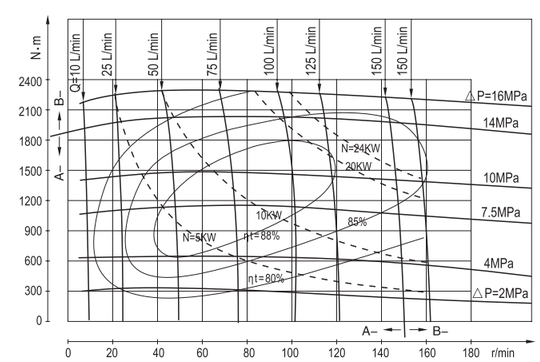

Installation

A Version Square flange

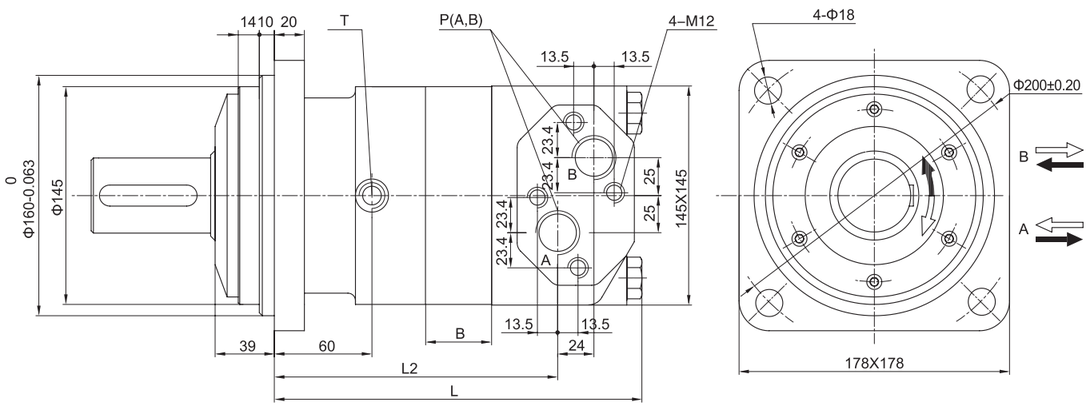

A1 Version Square flange

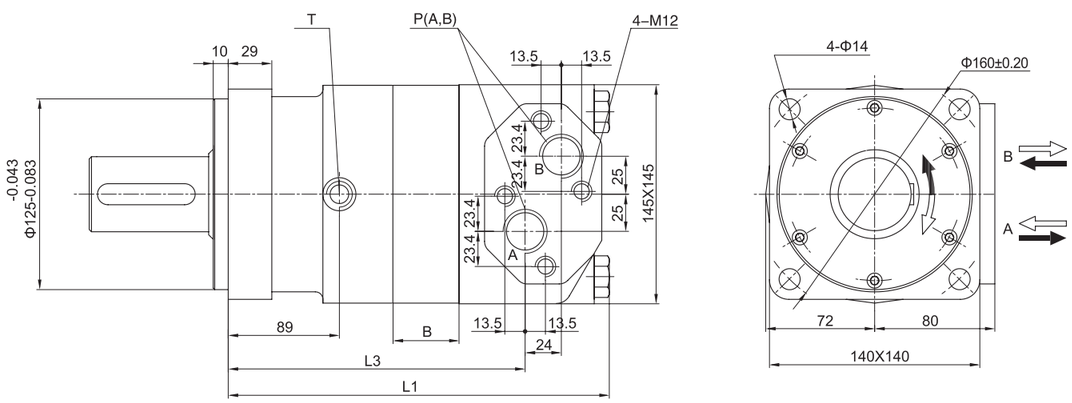

TYPE	BMV-315	BMV-400	BMV-500	BMV-630	BMV-800	BMV-985
L	214	221	229	239	253	268
L1	244	251	259	269	283	298
L2	156	163	171	181	195	210
L3	186	193	201	211	225	240
B	19	26	34	44	58	73

SHAFT VERSION

Only match with A flange

P：Φ50 Cylindrical shaft, parallel key 14X9X70

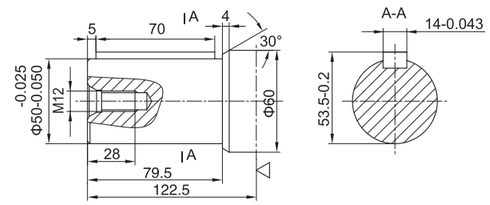

H5：Φ40 Splined shaft, 6–40X35X10

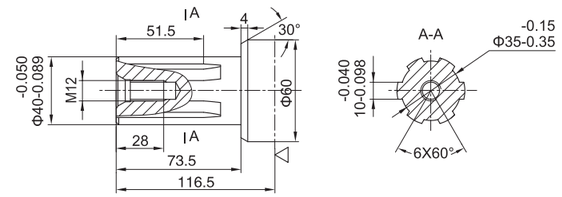

K2：Φ44 Involute splined shaft, Modulus2.5 Teeth 16 Pressure angle 30°

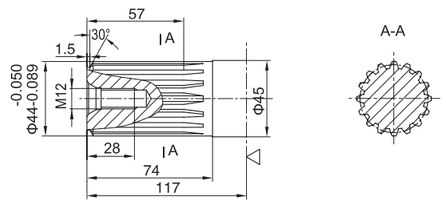

K3：Φ45 Involute splined shaft, Modulus2.5 Teeth 17 Pressure angle 30°

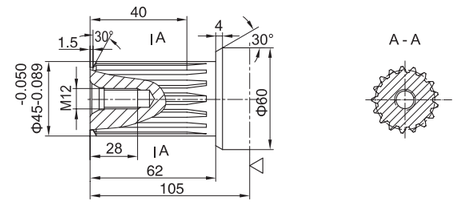

Only match with A1 flange

P1：Φ40 Cylindrical shaft, parallel key 12X8X45

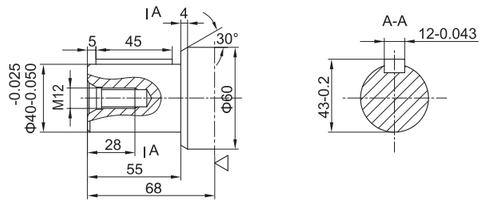

H4：Φ40 Splined shaft, 8–40X35X7

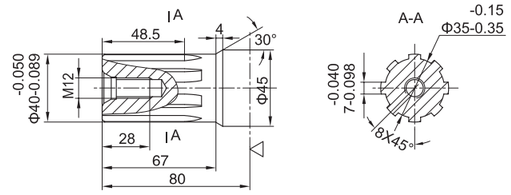

ORDERING CODE

		1	2	3	4		5
BMV	–					/	

1	Displacement
315、400、500、630、800、985	

2	Shaft
P	Φ50 , 14X9X70
P1	Φ40 , 12X8X45
H4	Φ40 , 8–40X35X7
H5	Φ40 , 6–40X35X10
K2	Φ44 , m2.5 z16 a30°
K3	Φ45 , m2.5 z17 a30°

3	Mounting Flange
A	4–Φ18 , Φ160
A1	4–Φ14 , Φ125

4	Ports	
	P(A,B)	T
Y	G1"	G1/4"
Y1	G3/4"	G1/4"
Y2	M33X2	M14X1.5
Y3	M27X2	M14X1.5
Y4	M22X1.5	M14X1.5
Y5	M18X1.5	M14X1.5

5	Special Features
T	

Installation

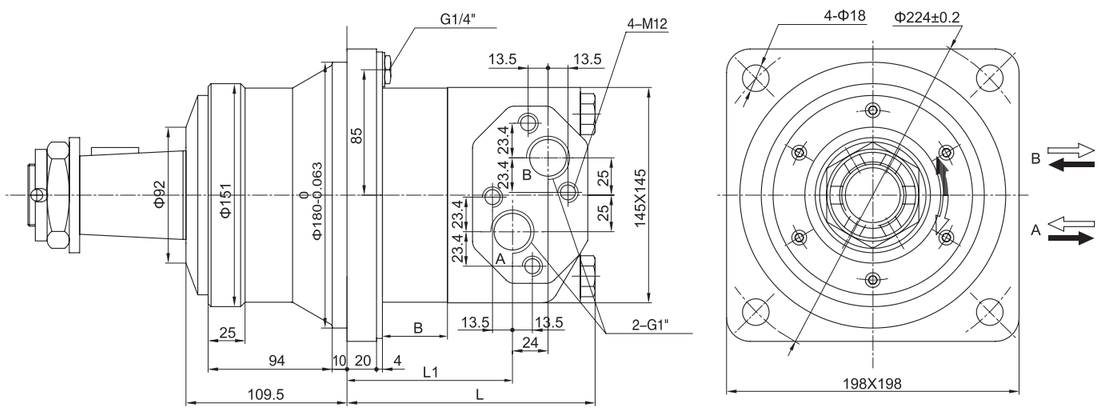

TYPE	BMVW-315	BMVW-400	BMVW-500	BMVW-630	BMVW-800	BMVW-985
L	146	153	161	172	185	200.5
L1	86	93	101	111	125	140
B	19	26	34	44	58	73

SHAFT VERSION

P：Φ50 Cylindrical shaft, parallel key 14X9X70

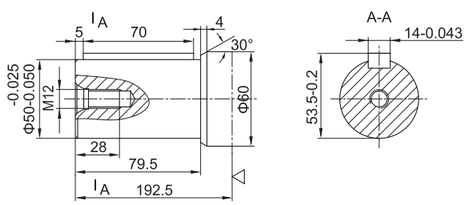

Z：Φ60 Tapered shaft, taper1: 10, parallel key B16X10X32

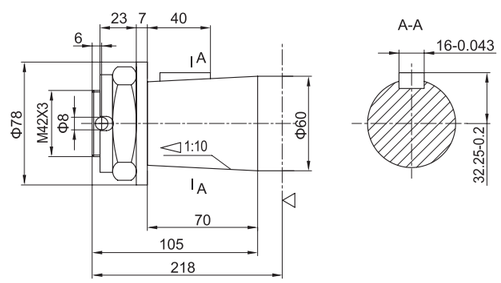

ORDERING CODE

		1	2				3
BMVW	–			A	Y	/	

1	Displacement
315、400、500、630、800、985	

2	Shaft
P	Φ50 ， 14X9X70
Z	Φ60，1:10，B16X10X32

3	Special Features
T	

Installation

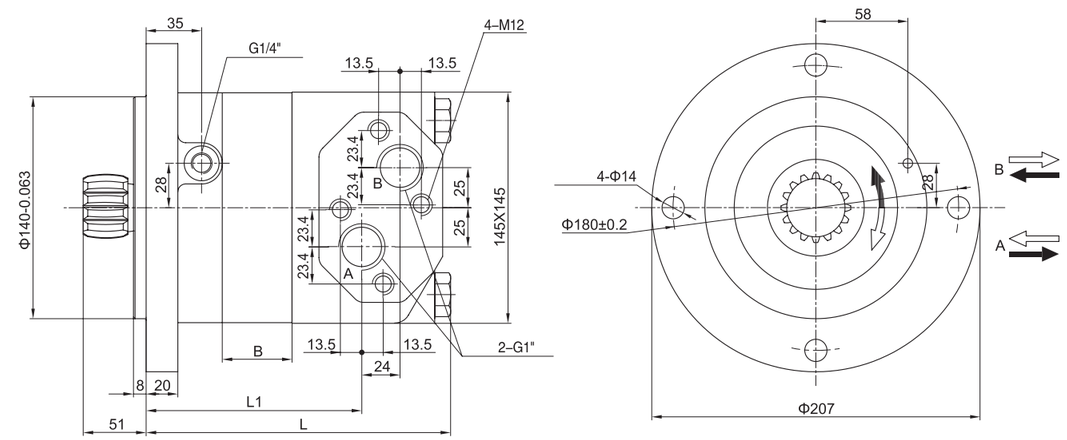

TYPE	BMVS-315	BMVS-400	BMVS-500	BMVS-630	BMVS-800	BMVS-985
L	167	174	182	192	206	221
L1	110	117	125	135	149	164
B	19	26	34	44	58	73

SHAFT VERSION

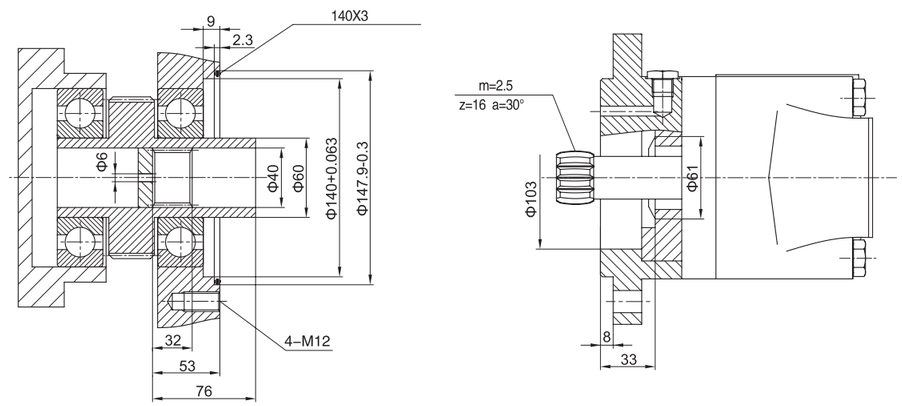

ORDERING CODE

		1		2
BMVS	–		/	

1	Displacement
315、400、500、630、800、985	

2	Special Features
T	

TECHNICAL DATA

TYPE		BMX-800	BMX-1000	BMX-1250
Displacement(ml/r)		759.6	949.5	1186.8
Max.Pressure.Drop (Mpa)	cont.	16	16	16
	int.	18	18	18
	peak.	21	21	21
Max.torque (N.m)	cont.	1690	2160	2650
	int.	1903	2379	2973
	peak.	2220	2774	3469
Speed.Range(cont.)(r/min)		5-200	5-160	5-130
Max.Flow(cont.)(L/min)		160	160	160
Max.Output.Power(cont.)(Kw)		35	35	35
Weight (kg)		54	56	58

Intermittent operation the permissible values may occur for max. 10% of every minute
Peak load: the permissible values may occur for max. 1% of every minute

FUNCTION DIAGRAMS

BMX-800

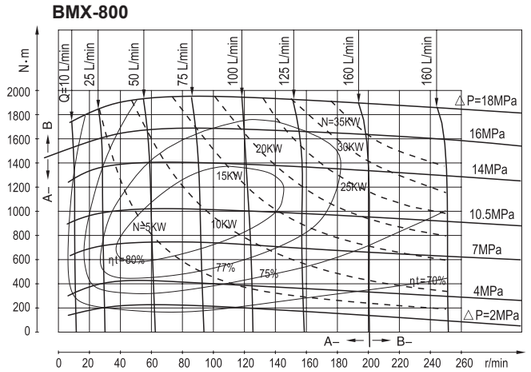

BMX-1000

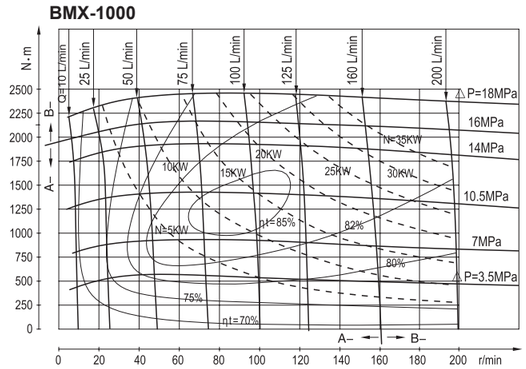

BMX-1250

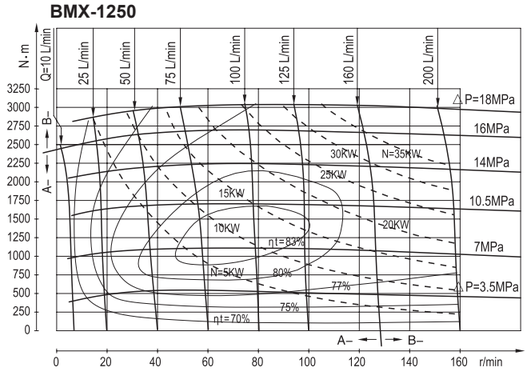

Installation

A Version Square flange

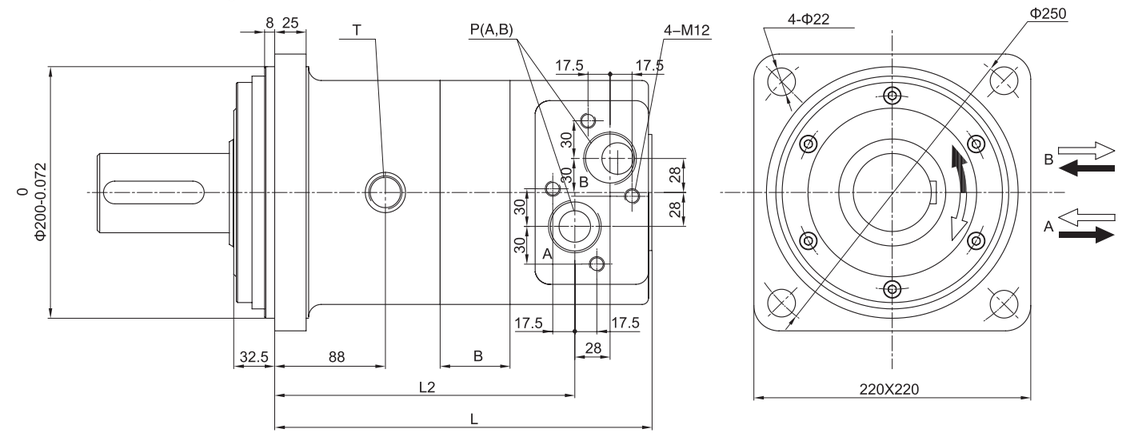

A1 Version Square flange

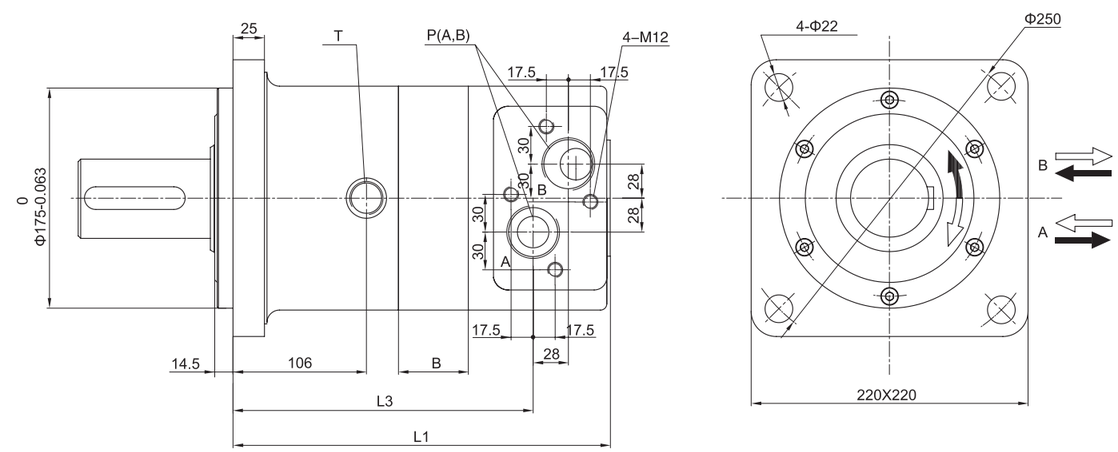

TYPE	BMX-800	BMX-1000	BMX-1250
L	278	288	300
L1	296	306	318
L2	217	227	239
L3	235	245	257
B	33	43	55.5

SHAFT VERSION

P：Φ63 Cylindrical shaft, parallel key 18X11X80

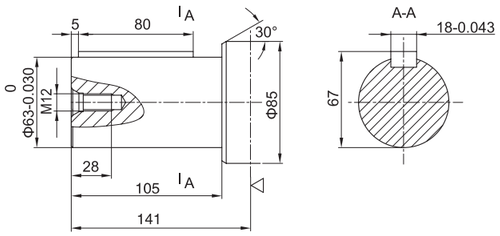

H2：Φ45 Splined shaft, 6–45X39X12

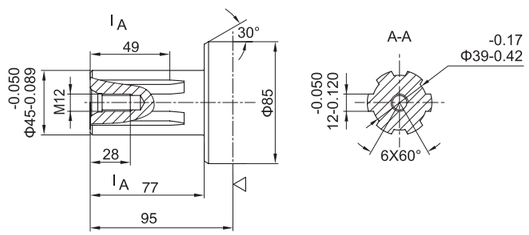

ORDERING CODE

		1	2	3	4		5
BMX	–					/	

1	Displacement
800、1000、1250	

2	Shaft
P	Φ63 ， 18X11X80
H2	Φ45 ， 6–45X39X12

3	Mounting Flange
A	4–Φ22 ， Φ200
A1	4–Φ22 ， Φ175

4	Ports	
	P(A,B)	T
Y	G1$\frac{1}{4}$"	G3/8"
Y1	Φ36	G3/8"

5	Special Features
T	

COMPARISON

	BMP	BMR	BMS	BMSS	BMT	BMTS	BMV	BMVS	BMX
Danfoss	OMP	OMR	OMS	OMSS	OMT	OMTS	OMV	OMVS	–
M+S	EPM	EPRM	EPMS	–	EPMT	–	EPMV	–	–

USAGE AND NOTICE

1、Selecting motor by standard technical data.
2、The motor must be coaxial with the driven part and the bracket should be stiff enough.
3、Working temperature is - 30...+90 ℃ . Hydraulic oil with kenimatic viscosity 25~70mm^2/s (50 ℃) is recommended. The filter is about 20μm. The oil must be clear, polluted oil will damage the motor badly.
4、For BM3-6 there should be a pipe connected the drain port and the oil tank; for BMR(2) the back pressure should be lower than 0.7Mpa, if the back pressure is higher than 1.0Mpa, a drain line should be connected to the oil tank.
5、If nonstandard motor is needed, please contact our technical department.

COMMON UNIT AND CONVERSION

N	1 N = 10^{-3} KN	
kgf	1 kgf = 9.81 N	
lbf	1 lbf = 4.45 N	
bar	1 bar = 10^5 Pa = 14.5 Psi	
Pa	1 Pa = 1 N/m^2 = 10^{-6} MPa	
N · m		
kgf · m	1kgf·m=9.81 N·m	

FORMULA

n	Ts	Ps
$n=\frac{q_s}{V}\eta_v$ (r/min) q_s – (L/min) V – (L/r) η_v	$Ts=\frac{\Delta pV}{2\pi}\eta_m$ (N·m) Δp – (MPa) η_m	Ps=n*Ts/9550